INTERFACE CONTROLL DOCUMENT

MASS PROPERTIES: MASS = 2.37 lb (1.07 kg)

REVISIONS					
ZONE	REV.	ECO #	DESCRIPTION	DATE	APPROVED
	A	-	INITIAL RELEASE	06/15/2017	B. MOAK

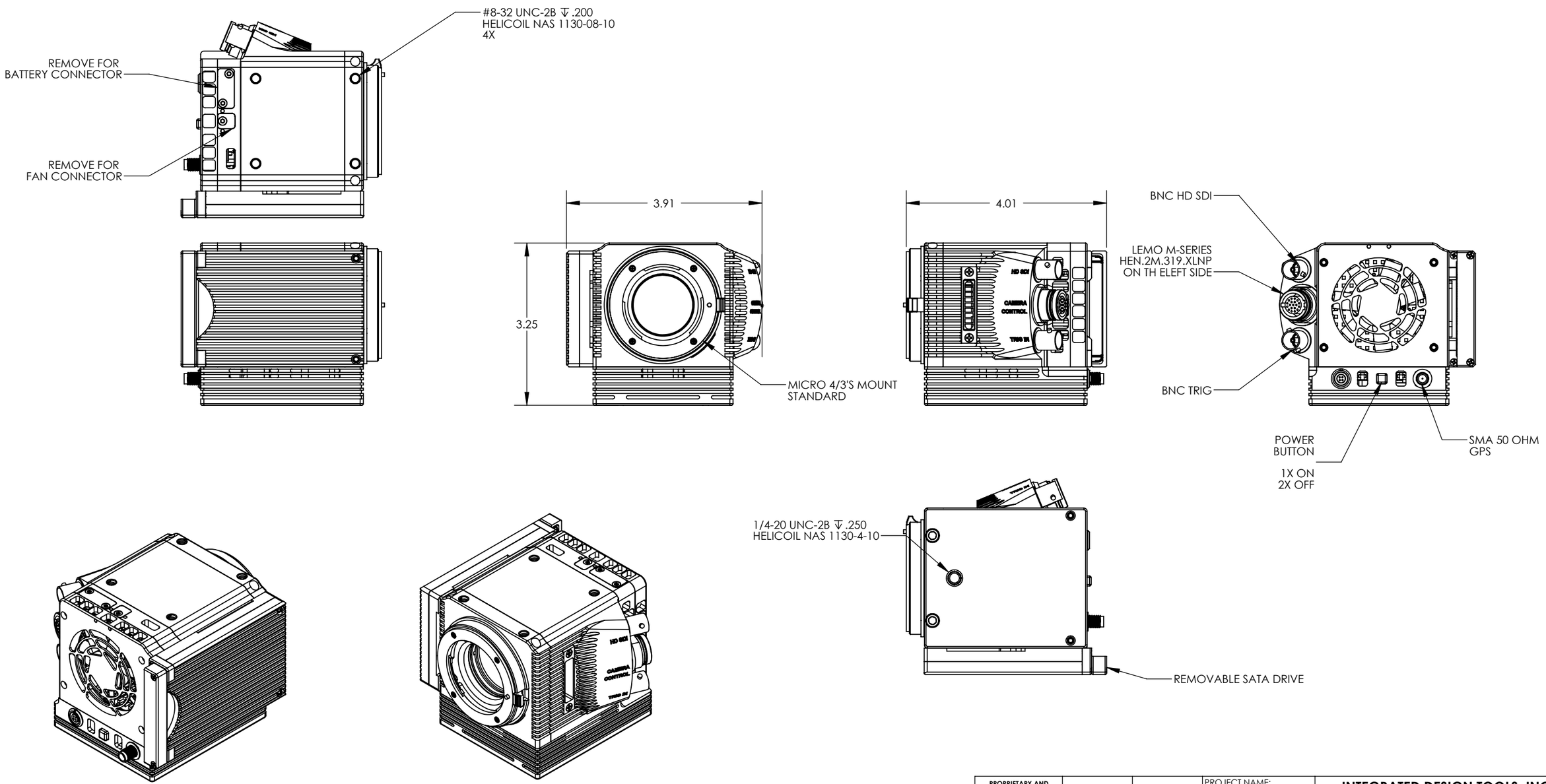

PROPRIETARY AND CONFIDENTIAL

THE INFORMATION CONTAINED IN THIS DRAWING IS THE SOLE PROPERTY OF INTEGRATED DESIGN TOOLS, INC. ANY REPRODUCTION IN PART OR AS A WHOLE WITHOUT THE WRITTEN PERMISSION OF INTEGRATED DESIGN TOOLS, INC. IS PROHIBITED.

THIRD ANGLE PROJECTION

UNLESS OTHERWISE SPECIFIED:
DIMENSIONS ARE IN INCHES
TOLERANCES ON:
FRACTIONAL ± 1/16
DECIMAL .X ± .03 .XX ± .01 .XXX ± .005
ANGULAR ± 1°

DO NOT SCALE DRAWING

PROJECT NAME: O CAMERA

DRAWN:	B. MOAK	06/15/2017
CHECKED:	X. XXXX	06/15/2017
MECH. ENGINEER:	B. MOAK	06/15/2017
ELECTRICAL ENGINEER:		
OPERATION MANAGER:		
PROGRAM MANAGER:		

INTEGRATED DESIGN TOOLS, INC
1 WEST MOUNTAIN STREET SUITE 3
PASADENA, CA 91103

TITLE: O CAMERA ASSY, ICD

SIZE:	DWG. NO.	REV
B	1125-0100	A

SCALE: 1:2 | DATE: 6/15/2017 | SHEET 1 OF 1